| ECO NO. | DATE | REV. | REVISION RECORD | AUTH. | DR.BY |
|---|---|---|---|---|---|
| 2083 | 1/27/93 | A | ADDED RELAY TO THE CONTROL BOX; WIRING RAN FROM TB1-3 TO EXHAUST TEMP. SWITCH TO O.P. SWITCH TO WATER TEMP. SWITCH. NOW FROM TB1-3 TO O.P. SWITCH TO EXHAUST TEMP. SWITCH TO WATER TEMP. SWITCH | | WRM |
| 2193 | 6/14/93 | B | TERMINAL BLOCKS TB1 AND TB2 WERE 5 POSITION BLOCKS, NOW 10 POSITION BLOCKS | | WRM |
| 2716 | 4/11/95 | C | O.P. SW. WAS CLOSED, EX. TEMP SW. WAS OPEN | | MKM |
| 3081 | 10/9/96 | D | CHANGE ALT. GROUND WIRE FROM GRN TO BLK | | BRN |
| 4664 | 8/3/00 | E | ADDED RELAY K2, REMOVE 10A C.B.; ADDED CORRECTION TO GOVERNOR FROM FUEL PUMP. ADDED TRANSIENT SUPPRESSOR TO CIRCUIT. | | TSM |
| 5536 | 4-23-2003 | F | ADDED OVERSPEED BOARD | | GA |

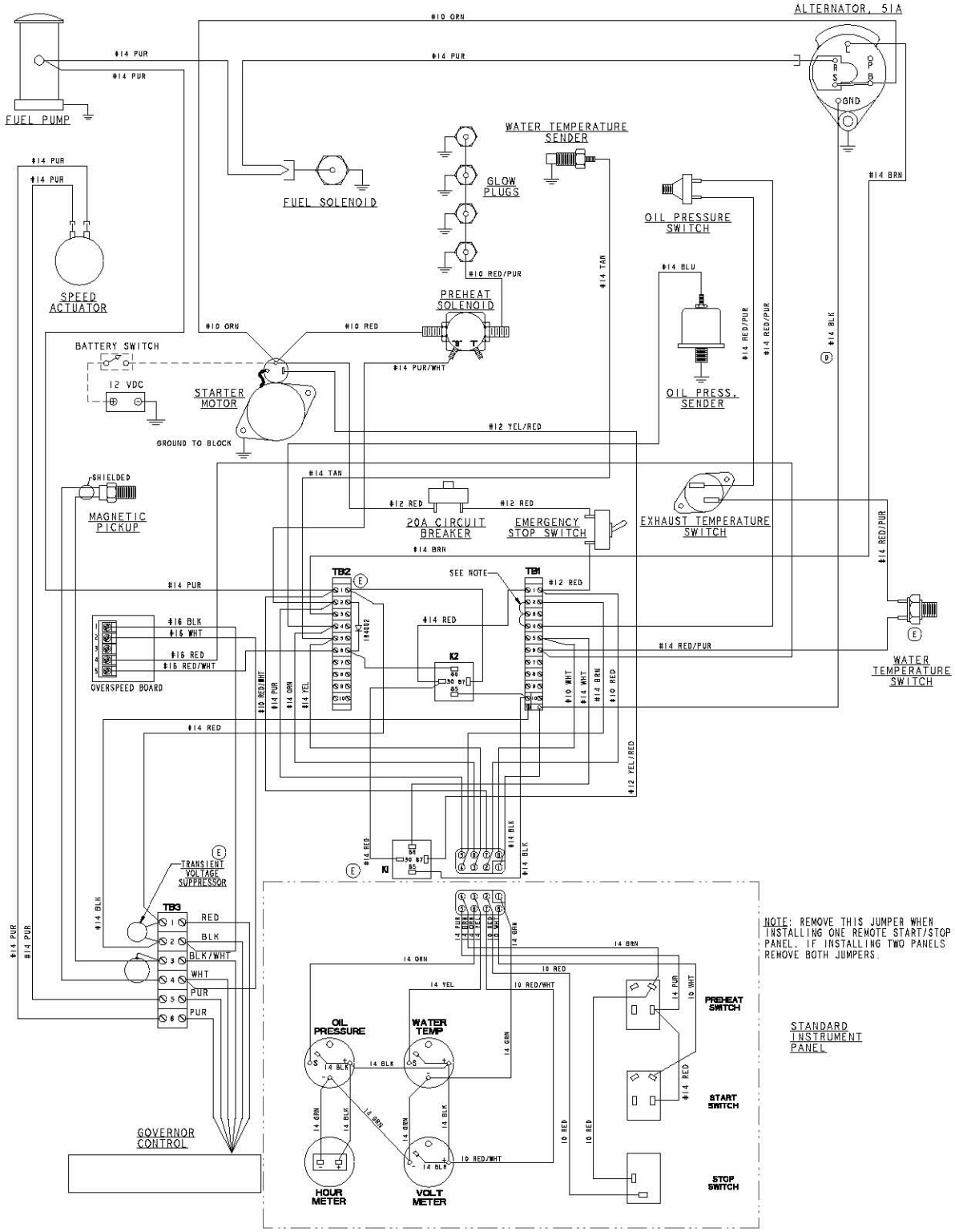


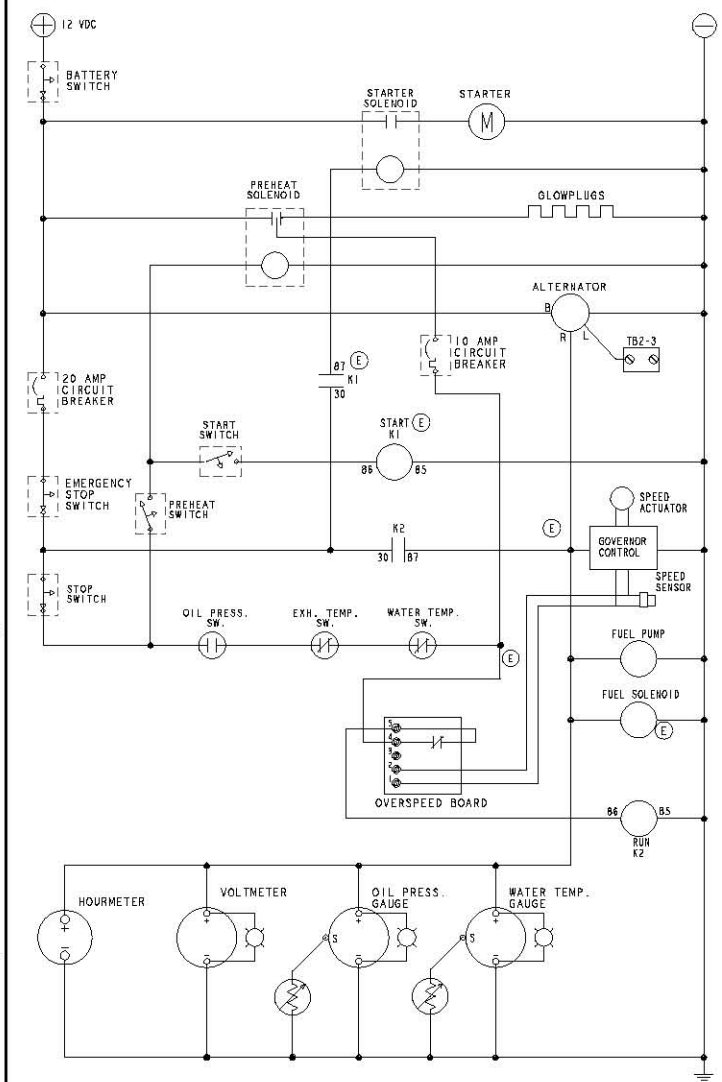


| TOLERANCES (UNLESS OTHERWISE NOTED) | WESTERBEKE CORPORATION AVON MA. 02322 | | |
|---|---|---|---|
| INCHES / MILLIMETERS | TITLE: WIRING DIAGRAM, 15.0 BTDA, 20, 25, 32 BED W/ELECTRONIC GOVERNING | | |
| DRAWN BY: WRM | DATE: 31/Jan/02 | DETAILS: | |
| APPROVED BY: | DATE: | | |
| DIMENSIONS INCHES / MILLIMETERS | SCALE: NONE | SIZE: E | DRAWING NUMBER: 39422 |
| SHEET: 1 OF 1 | | | REV. F |